Modulating linear actuator for adjusting dampers and slide valves in technical building installations

- **Air damper size up to approx. 0.7 m²**
- **Actuating force 100 N**
- **Nominal voltage AC/DC 24 V**
- **Control modulating DC (0)2...10 V**
- **Position feedback DC 2...10 V**
- **Length of Stroke Max. 100 mm, adjustable in 20 mm increments**
- **Running time motor 3.5 s**

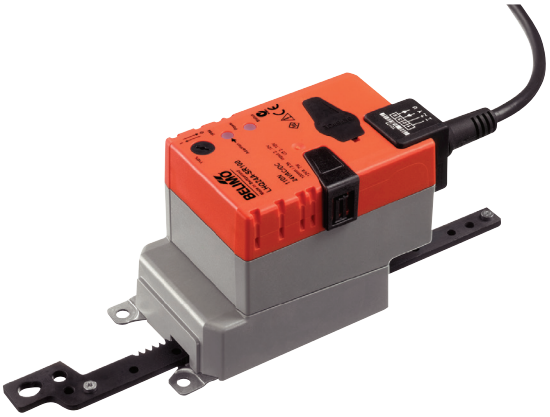

Technical data

Electrical data	Nominal voltage	AC/DC 24 V
	Nominal voltage frequency	50/60 Hz
	Nominal voltage range	AC 19.2...28.8 V / DC 21.6...28.8 V
	Power consumption in operation	13 W
	Power consumption in rest position	2 W
	Power consumption for wire sizing	23 VA
	Power consumption for wire sizing note	Imax 20 A @ 5 ms
	Connection supply / control	Cable 1 m, 4 x 0.75 mm²
	Parallel operation	Yes (note the performance data)
Functional data	Actuating force motor	Min. 100 N
	Positioning signal Y	DC 0...10 V
	Positioning signal Y note	Input impedance 100 kΩ
	Operating range Y	DC 2...10 V
	Position feedback U	DC 2...10 V
	Position feedback U note	Max. 0.5 mA
	Position accuracy	±5%
	Direction of motion motor	Selectable with switch
	Direction of motion note	Y = 0 V: with switch 0 (retracted) / 1 (extended)
	Manual override	With push-button, can be locked
	Length of Stroke	Max. 100 mm, adjustable in 20 mm increments
	Minimum stroke	40 mm
	Stroke limitation	can be limited on both sides with mechanical end stops
	Running time motor	3.5 s / 100 mm
	Adaption setting range	manual (automatic on first power-up)
	Sound power level motor	56 dB(A)
Safety	Protection class IEC/EN	III Safety extra-low voltage
	Protection class UL	UL Class 2 Supply
	Degree of protection IEC/EN	IP54
	Degree of protection NEMA/UL	NEMA 2, UL Enclosure Type 2
	EMC	CE according to 2014/30/EU
	Certification IEC/EN	IEC/EN 60730-1 and IEC/EN 60730-2-14
	Certification UL	cULus according to UL 60730-1A, UL 60730-2-14 and CAN/CSA E60730-1:02
	Mode of operation	Type 1
	Rated impulse voltage supply / control	0.8 kV
	Control pollution degree	3
	Ambient temperature	-30...40°C
	Ambient temperature note	Caution: +40...+50°C utilisation possible only under certain restrictions. Please contact your supplier.
	Non-operating temperature	-40...80°C
	Ambient humidity	95% r.h., non-condensing
	Maintenance	Maintenance-free
Weight	Weight	0.77 kg

Safety notes

- The device must not be used outside the specified field of application, especially not in aircraft or in any other airborne means of transport.
- Outdoor application: only possible in case that no (sea)water, snow, ice, insolation or aggressive gases interfere directly with the actuator and that is ensured that the ambient conditions remain at any time within the thresholds according to the data sheet.
- Only authorised specialists may carry out installation. All applicable legal or institutional installation regulations must be complied during installation.
- The device may only be opened at the manufacturer's site. It does not contain any parts that can be replaced or repaired by the user.
- Cables must not be removed from the device.
- The rotary supports and coupling pieces available as accessories must always be used if transverse forces are likely. In addition, the actuator must not be tightly bolted to the application. It must remain movable via the rotary support (refer to «Assembly notes»).
- If the actuator is exposed to severely contaminated ambient air, appropriate precautions must be taken on the system side. Excessive deposits of dust, soot etc. can prevent the gear rod from being extended and retracted correctly.
- If not installed horizontally, the gear disengagement pushbutton may only be actuated when there is no pressure on the gear rod.
- To calculate the torque required, the specifications supplied by the damper manufacturers concerning the cross-section, the design, the installation site and the ventilation conditions must be observed.
- If a rotary support and/or coupling piece is used, actuation force losses are to be expected.
- Self adaptation is necessary when the system is commissioned or whenever the stroke limiting is adjusted (press the adaptation push-button).
- The device contains electrical and electronic components and must not be disposed of as household refuse. All locally valid regulations and requirements must be observed.

Product features

Mode of operation
The actuator is connected with a standard modulating signal of DC 0...10V and drives to the position defined by the positioning signal. Measuring voltage U serves for the electrical display of the damper position 0...100% and as slave control signal for other actuators.

Simple direct mounting
The actuator can be directly connected with the application using the enclosed screws. The head of the gear rod is connected to the moving part of the ventilating application individually on the mounting side or with the Z-KS2 coupling piece provided.

Manual override
Manual override with push-button possible (the gear is disengaged for as long as the button is pressed or remains locked).

Adjustable stroke
If a stroke limitation will be adjusted, the mechanical operating range on this side of the gear rod can be used starting with an extension length of 20 mm and then can be limited respectively in increments of 20 mm by means of mechanical end stops Z-AS2. A minimum permissible stroke of 40 mm must be allowed for.

High functional reliability
The actuator is overload protected, requires no limit switches and automatically stops when the end stop is reached.

Home position
The first time the supply voltage is switched on, i.e. at the time of commissioning, the actuator carries out an adaption, which is when the operating range and position feedback adjust themselves to the mechanical setting range.
The detection of the mechanical end stops enables a gentle approach to the end positions, thus protecting the actuator mechanics.
The actuator then moves into the position defined by the positioning signal.

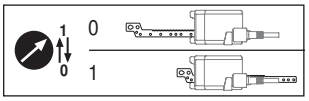

Product features

Adaption and synchronisation

An adaption can be triggered manually by pressing the “Adaption” button. Both mechanical end stops are detected during the adaption (entire setting range).
Automatic synchronisation after pressing the gear disengagement button is configured.
The synchronisation is in the home position (0%).
The actuator then moves into the position defined by the positioning signal.

Accessories

Electrical accessories

Description	Type
Signal converter voltage/current, supply AC/DC 24V	Z-UIC
Digital position indicator for front-panel mounting, 0...99%, front mass 72 x 72 mm	ZAD24
Range controller for wall mounting, adjustable electron. Min./max. angle of rotation limitation	SBG24
Positioner for wall mounting, range 0...100%	SGA24
Positioner in a conduit box, range 0...100%	SGE24
Positioner for front-panel mounting, range 0...100%	SGF24
Positioner for wall mounting, range 0...100%	CRP24-B1

Mechanical accessories

Description	Type
End stop set for LH	Z-AS2
Rotary support for compensation of transverse forces	Z-DS1
Coupling piece M6 for LH, galvanised steel	Z-KS2

Electrical installation

Notes

- Connection via safety isolating transformer.
- Parallel connection of other actuators possible. Observe the performance data.

Wiring diagrams

AC/DC 24 V, modulating

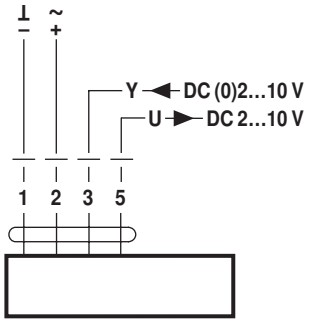

Cable colours:
1 = black
2 = red
3 = white
5 = orange

Signal cable lengths

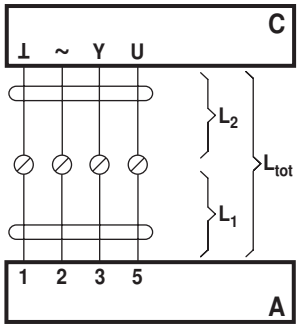

L_2 ⊥ / ~	$L_{tot} = L_1 + L_2$ AC	DC
0.75 mm²	≤30 m	≤5 m
1.00 mm²	≤40 m	≤8 m
1.50 mm²	≤70 m	≤12 m
2.50 mm²	≤100 m	≤20 m

A = actuator
C = control unit
L1 = actuator connecting cable
L2 = customer cable
Ltot = maximum signal cable length

Note:
In the event of several actuators switched in parallel, the maximum signal cable length is to be divided by the number of actuators.

Electrical installation

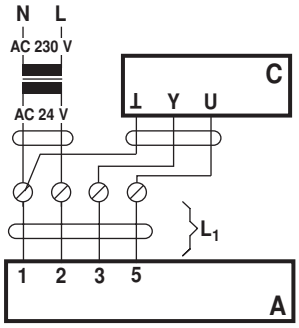

A = actuator
C = control unit
L1 = actuator connecting cable

Note:
If supply and data line are handled separately, then no special limitations apply for the installation.

Operating controls and indicators

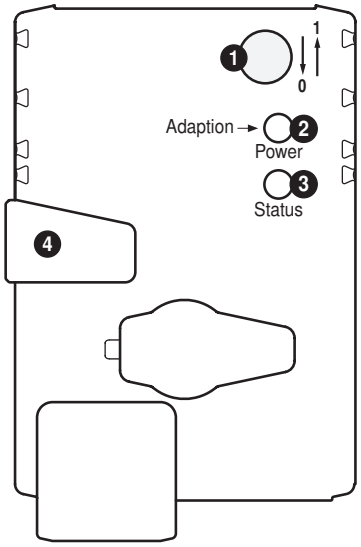

1 Direction of stroke switch

Switch over:	Direction of stroke changes

2 Push-button and LED display green

Off:	No power supply or malfunction
On:	In operation
Press button:	Triggers stroke adaptation, followed by standard mode

3 Push-button and LED display yellow

Off:	Standard mode
On:	Adaptation or synchronising process active
Press button:	No function

4 Gear disengagement button

Press button:	Gear disengages, motor stops, manual override possible
Release button:	Gear engages, synchronisation starts, followed by standard mode

Check power supply connection

2 Off and 3 On	Possible wiring error in power supply

Installation notes

Notes

- If a rotary support and/or coupling piece is used, losses in the actuation force losses are to be expected.

Applications without transverse force

The linear actuator is screwed directly to the housing at three points. Afterwards, the head of the gear rod is fastened to the moving part of the ventilation application (e.g. damper or slide valve).

Applications with transverse forces

Connect the coupling piece with the internal thread (Z-KS2) to the head of the gear rod. Screw the rotary support (Z-DS1) to the ventilation application. Afterwards, the linear actuator is screwed to the previously mounted rotary support with the enclosed screw. Afterwards, the coupling piece, which is mounted to the head of the gear rod, is attached to the moving part of the ventilating application (e.g. damper or slide valve). The transverse forces can be compensated for to a certain limit with the rotary support and/or coupling piece. The maximum permissible swivel angle of the rotary support and coupling piece is 10°, laterally and upwards.

Negative torque

max. 50% of the actuating force (Caution: Application possible only under certain restrictions. Please contact your supplier.)

Dimensions [mm]
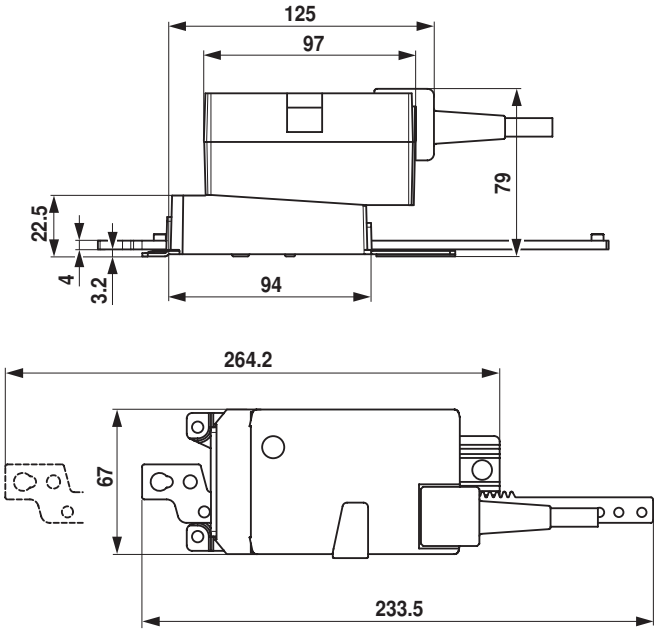
Dimensional drawings