72054-00001.A

i

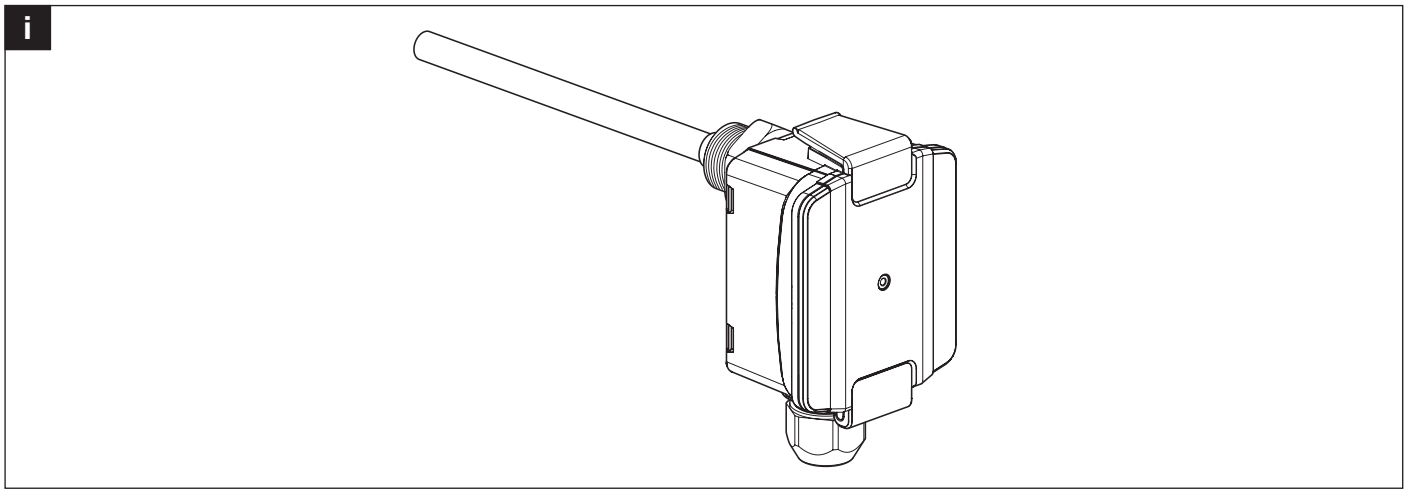

1

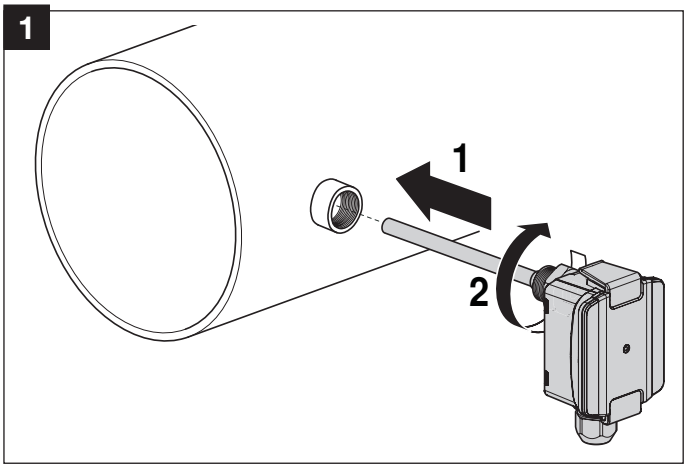

2

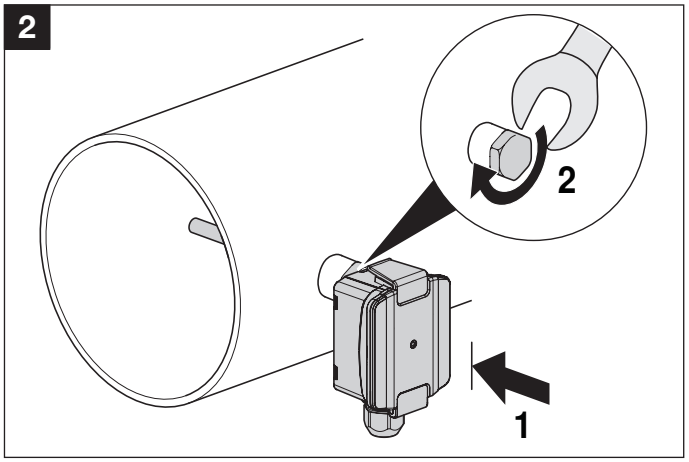

3

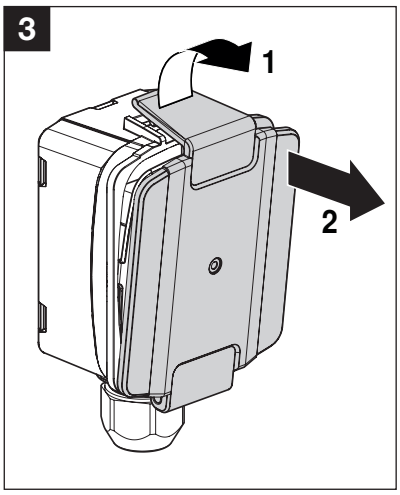

4

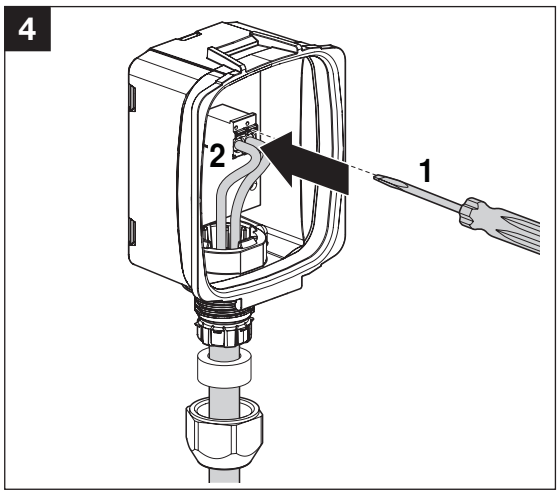

5

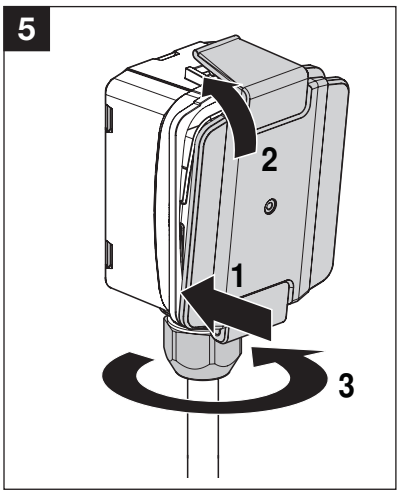

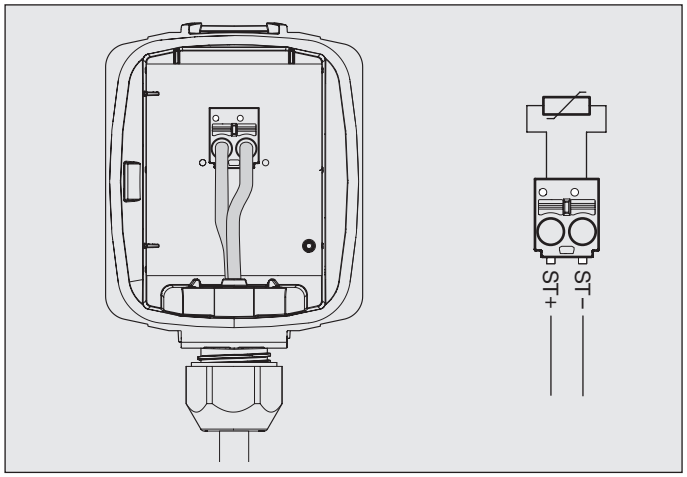

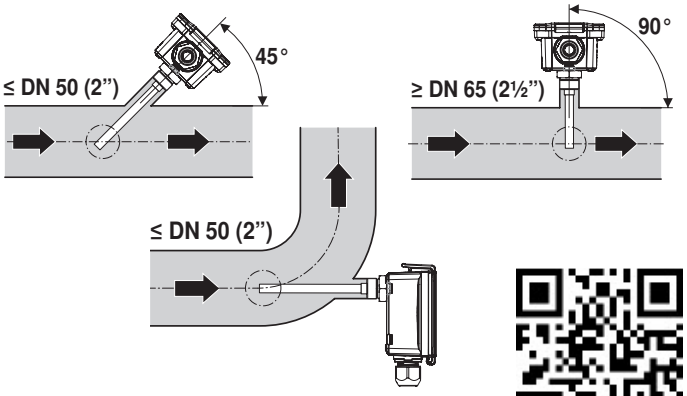

www.belimo.com/safety