71957-00001.A

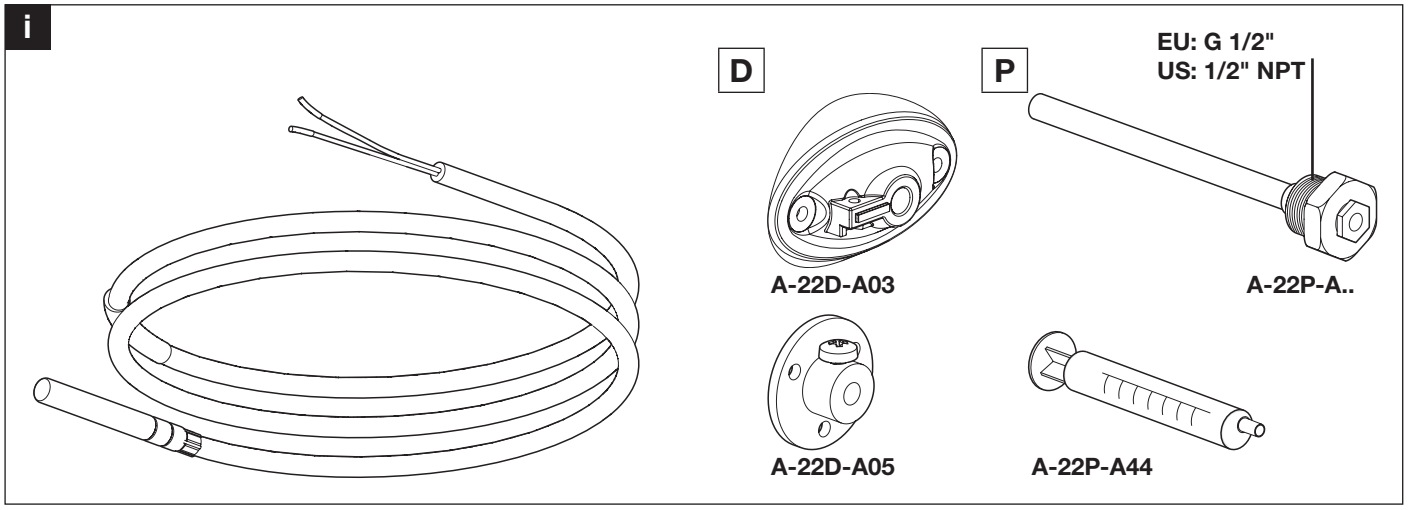

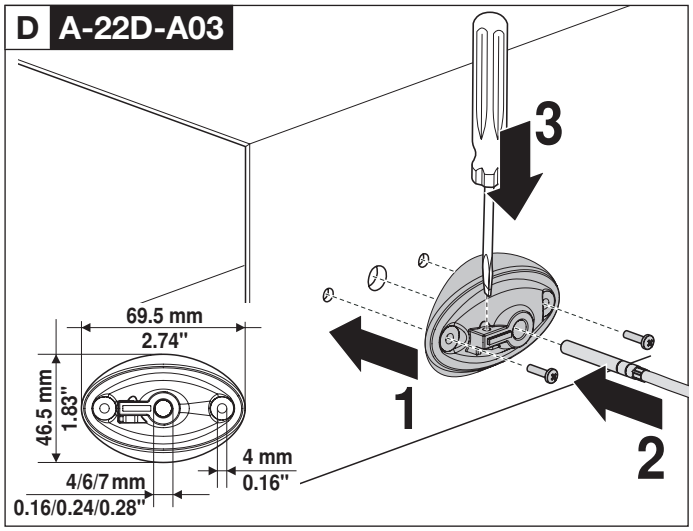

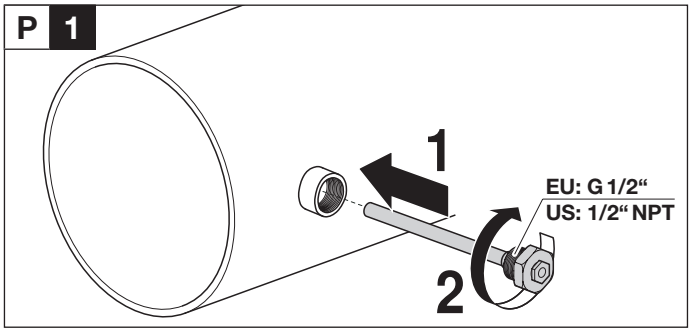

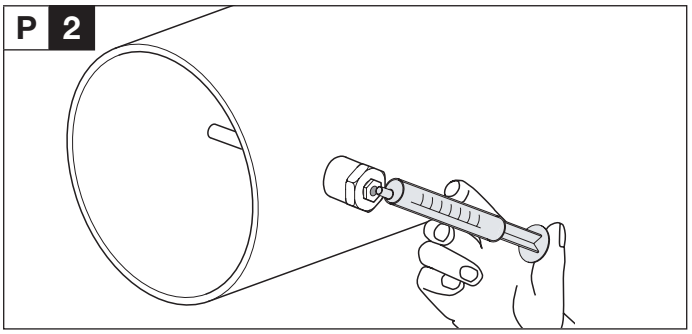

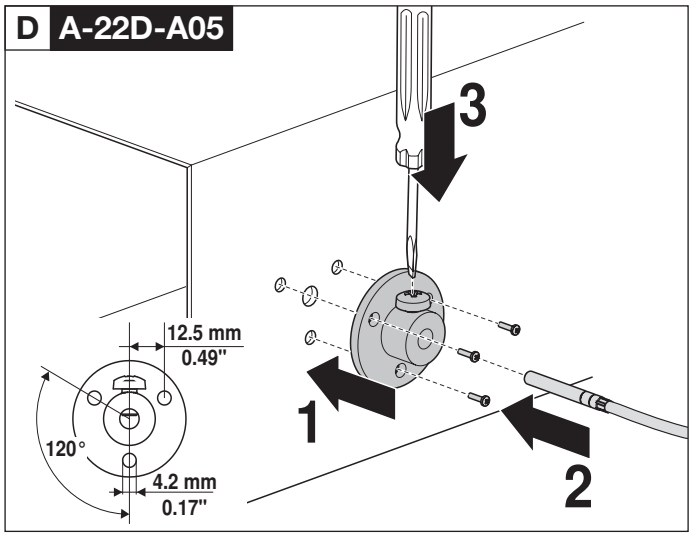

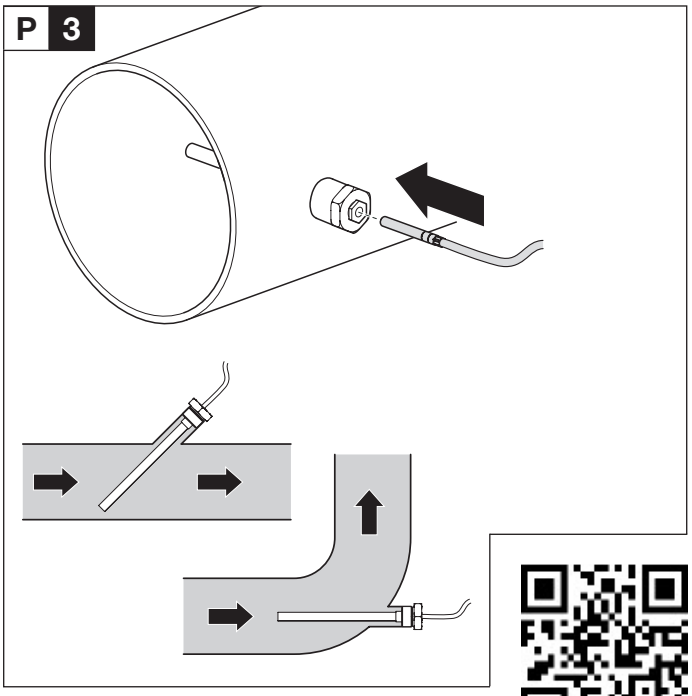

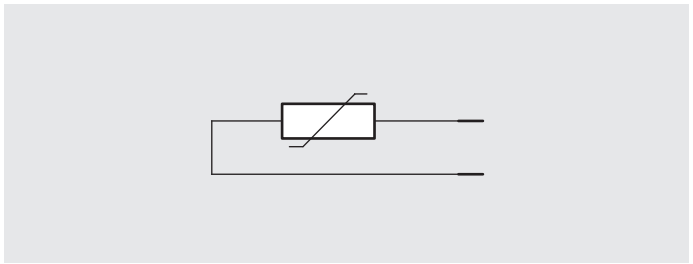

www.belimo.com/safety